KERO-SUN INC.

Radiant 22

PORTABLE KEROSENE HEATER OPERATION INSTRUCTIONS

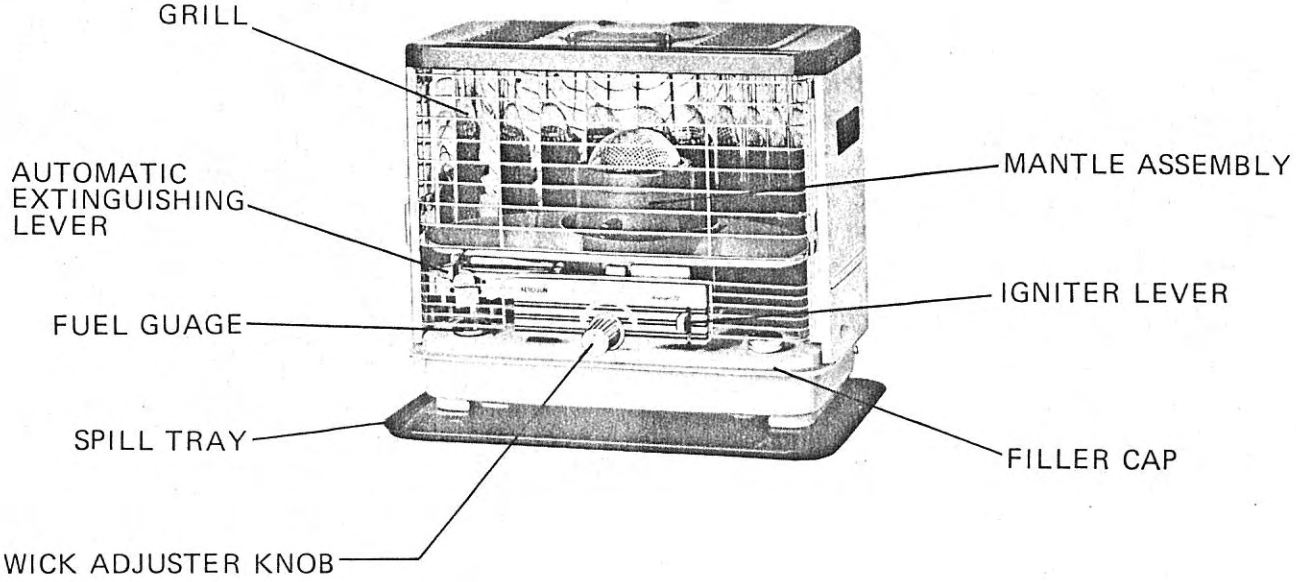

March '79.

The Kero-Sun Radiant 22 is equipped with automatic lighting and automatic extinguishing features. Two 1.5 D-size batteries provide power for the automatic igniter. The automatic extinguisher utilizes a shutter which covers the wick extinguishing the flame in the event that the heater is accidentally tipped.

The Radiant 22 has an output of 7200 B.T.U./hour with a continuous burning duration of 22 hours on one gallon of kerosene.

INSPECTION AND ASSEMBLY

1. After removing the top protective packing, carefully remove heater from carton by lifting with the carrying handles on either side.

2. Open grill by gently pulling on right-hand side. Grill is hinged on the left.

3. Pull styrofoam packing wedge from cabinet top to release mantle assembly. Lift mantle *(in its protective enclosure)* out of the cabinet.

4. Check tightness of the three thumbscrews securing the cabinet to the fuel tank.

5. Locate the automatic extinguisher lever *(black with white arrow)* at center of cabinet and push lever fully to the side as indicated by the arrow. This sets the automatic extinguisher and exposes the wick.

6. Turn wick adjuster knob *(located in center of cabinet)* clockwise to raise wick. The wick should move uniformly and smoothly to a maximum height of 4 mm *(approximately ⅛ inch).*

7. Separate the mantle assembly from its protective styrofoam enclosure and carefully position it over the burner assembly. *(Note that the curled wire handle faces forward.)* Move the handle left and right to ensure the mantle is positioned properly on the front and back mantle holders.

8. Close grill.

9. Check to be sure two D-size batteries are properly seated in battery holder at rear of cabinet.

FUELING

Fill the fuel tank with fresh, good quality kerosene until the fuel guage indicates "F". **Do Not Overfill.** Spills are a fire hazard - wipe up before lighting heater. Use of the siphon to fill the fuel tank is recommended.

WARNING	KEROSENE ONLY
BURN ONLY KEROSENE in this heater. The use of gasoline, white gas, Coleman fuel, or any substitute can be extremely dangerous. **Read all instructions and caution labels before using.**	

To use siphon, insert straight hose into kerosene container and flexible hose into heater fuel tank. Elevate kerosene container a few inches to increase fuel flow. Close top vent *(turn clockwise)* and squeeze bulb until flow begins. To stop flow, simply open top vent *(turn counter-clockwise).*

TO LIGHT

1. Ensure that the extinguisher lever is set at the full left position.

2. Turn the wick to its highest position by turning the wick adjuster knob fully clockwise.

3. Move the curled wire handle on the mantle lightly to the left and right to ensure that the mantle is positioned properly in the burner. If the wick is cramped in the mantle chimney, the heater will smoke.

4. Gently depress the igniter lever *(with red arrow at right of wick adjuster knob)* and note that the igniter coil glows as it touches the wick. Hold in this position until flame appears on wick, then release.

PLEASE NOTE: Heater may also be ignited manually by using a match.

BURNING REGULATION

Within three minutes after lighting, flames will rise, and in another minute the circular coil on top of the inner chimney will glow. After five minutes, the wire net should be glowing red.

If flames rise above the wire net, turn the wick adjuster knob counter-clockwise to lower the wick. The optimum setting causes the wire net to glow red with only a very slight blue flame showing above the net.

EXTINGUISHING

Turn the wick adjuster knob fully counter-clockwise. The flame will go out in a short time. After extinguishing, always check that the flame is completely out.

CLEANING THE WICK

After extended use, tars will accumulate on the top edge of the wick, which will cause inefficient burning and difficulty in wick adjustment. To clean the wick, proceed as follows:

With the fuel tank empty *(Showing "E" on the fuel gauge),* raise the wick as high as possible *(knob turned fully clockwise)* and let the flame burn until it goes out. This will burn off the tar and restore the wick to its original condition *(the top edge of the wick will become white).* Remove cinders from the wick by pinching off with a rag after wick cools. Carefully vacuum off any ashes or soot which has accumulated around burner and wick with soft brush.

AUTOMATIC IGNITER MAINTENANCE

If difficulty is experienced in lighting the wick, check that the igniter coil is properly installed and its filament is intact. If the igniter coil appears to be normal, the batteries are probably low and should be replaced. If the igniter coil is faulty, replace as follows:

1. Remove batteries. Open grill and remove mantle assembly.

2. Partially raise the igniter unit and grasp the igniter coil holder with one hand; press in on the igniter coil with the other hand and rotate it ¼ turn to release the holding pegs and allow removal.

3. Insert the new igniter coil by pressing it into the holder and rotating it to engage the pegs. Be careful not to touch the filament.

4. Reinstall mantle, grill and batteries.

REPLACING THE WICK

1. After the heater has cooled, open grill and remove the entire mantle assembly.

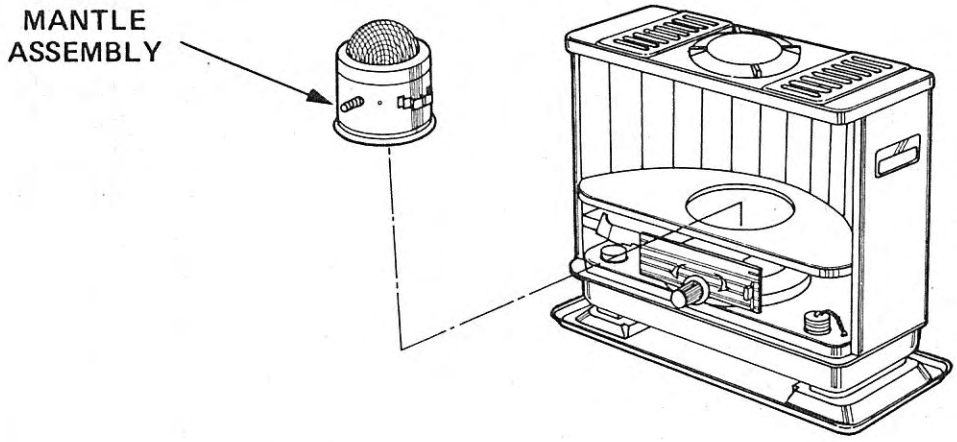

2. Remove the automatic extinguishing lever by pulling it straight out of the cabinet. *(The lever is retained by means of a snap lock.)* Activate the extinguisher by tilting the heater.

3. Remove the three thumbscrews at the sides and rear of the cabinet. Then carefully lift off the cabinet.

4. Disconnect the electrical leads at the battery holder. Remove the three thumbscrews securing the extinguisher assembly and lift off the extinguisher assembly and draft shield.

5. Loosen the three wingnuts and rotate the retainers ¼ turn to allow removal of the wick adjuster assembly. Lift out the wick adjuster assembly.

6. Slide the rubber packing off the lower part of the wick adjuster. Fold the wick and remove it from the wick adjuster.

7. Turn the wick adjuster knob fully clockwise, where the wick would be at its highest position.

8. Fold the replacement wick and insert it into the wick adjuster. Position the wick so that the top protrudes 4 mm *(approx. ⅛")* above the wick adjuster. Then open the wick and press it uniformly against the projections on the inner wall of the wick adjuster.

Note
If the wick is too high, the automatic extinguisher will not function properly. If it is too low, the heater will not produce its full heat potential and may smoke or produce odors.

9. Slide the rubber packing over the lower wick segments and into position on the wick adjuster. Install the wick adjuster assembly into the tank while guiding all four lower wick segments into the tank. Ensure that all four wick segments go fully into the tank and that the rubber packing is correctly positioned. Position the retainers over the adjuster and tighten the wing nuts.

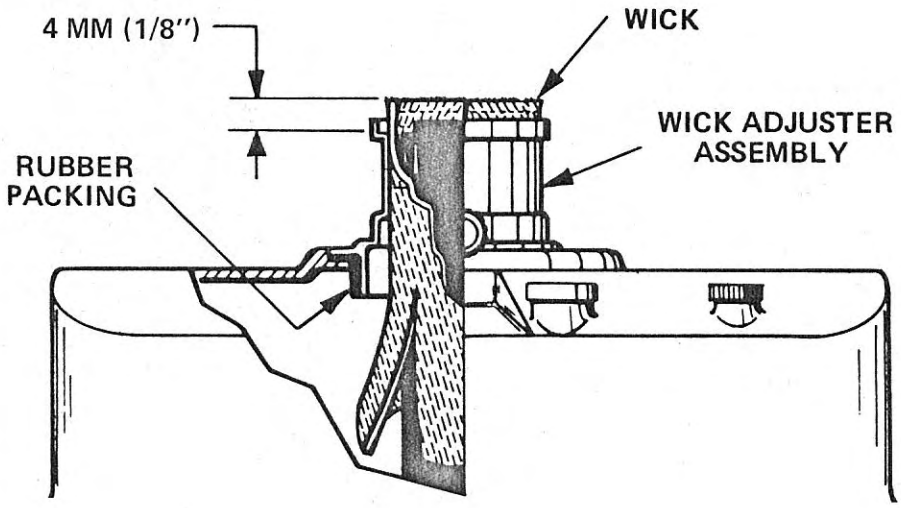

10. Check that the newly installed wick protrudes evenly above the adjuster *(4 mm)* around its circumference. Check that the wick moves smoothly by turning the wick adjuster knob in both directions.

11. Using scissors, carefully trim any ragged edges of the wick evenly along the top surface.

12. Reinstall the automatic extinguisher assembly and secure with the three thumbscrews. Reconnect the electrical leads at the battery holder. Install the cabinet and secure with the three thumbscrews. Insert the extinguisher lever into slot and press it into its detent *(snap lock)* position.

13. Install the mantle assembly and close grill. Allow 15 minutes for the wick to thoroughly saturate before igniting the heater.

SAFETY PRECAUTIONS

1. BURN ONLY KEROSENE in this heater. NEVER use gasoline, white gas, camp-stove or any other fuel. These fuels are extremely dangerous if used in kerosene heaters.

2. Store fuel far away from any heat source, in a can clearly marked KEROSENE.

3. Keep heater away from all burnable materials such as clothes, curtains, wood, etc.

4. Heater surfaces become hot. Keep children away.

5. Do not move, service, or refill heater while it is burning or hot.
   Extinguish flame first and let it cool.

6. Refuel heater wipe up any spills when it is cool. Use the Kero-Sun siphon to prevent any spillage.

7. Provide adequate ventilation. The heater needs oxygen just as you do.
   Crack a window to the outside one inch, or leave a door open to an adjacent room.

8. When turning heater off, make sure the flame is completely extinguished.

9. Keep outside of heater free of dust or of spilled kerosene.
   Follow maintenance instructions for optimum performance.

10. Keep heater level.

11. Avoid drafts.

12. Use only water-clear, fresh, pure kerosene. Yellow or colored kerosene will smoke, smell and not burn efficiently.

Key No.	Part Name	Remarks
1	CABINET ASSEMBLY	
1A	Top plate	
1B	Screw for top plate	4 pcs.
1C	Grill	
1D	Cabinet	
1E	Carrying handle	2 pcs.
1F	Thumbscrew for cabinet	3 pcs.
1G	Leveler	
2	MANTLE ASSEMBLY (COMPLETE)	
2A	Heating coil	
2B	Chimney disc	
2C	Inner chimney	
2D	Middle chimney	
2E	Outer chimney	
2F	E ring	2 pcs.
2G	Cross pin	2 pcs.
2H	Top ring	
2I	Wire net	
3	AUTOMATIC IGNITER ASSEMBLY	
3A	Igniter coil	
3B	Igniter unit	
3C	Screw for igniter unit	2 pcs.
4	AUTOMATIC EXTINGUISHER ASSEMBLY	
4A	Extinguisher unit	
4B	Extinguisher lever	
4C	Thumbscrew for extinguisher unit	3 pcs.
5	WICK ADJUSTER ASSEMBLY (COMPLETE)	
5A	Wick adjuster	
5B	Wick adjuster knob with screw	
5C	Wing nut	3 pcs.
5D	Retainer	3 pcs.
6	GLASS FIBER WICK	
7	RUBBER GASKET	
8	FUEL TANK ASSEMBLY (COMPLETE)	
8A	Fuel tank	
8B	Fuel gauge	
8C	Fuel filler plug	
9	BATTERY HOLDER	
9A	Battery holder	
9B	Wing nut	
10	SPIL TRAY	
10A	Thumbscrew for tray	
11	DECORATION PANEL	
11A	Screw for panel	
12	DRAFT SHIELD	

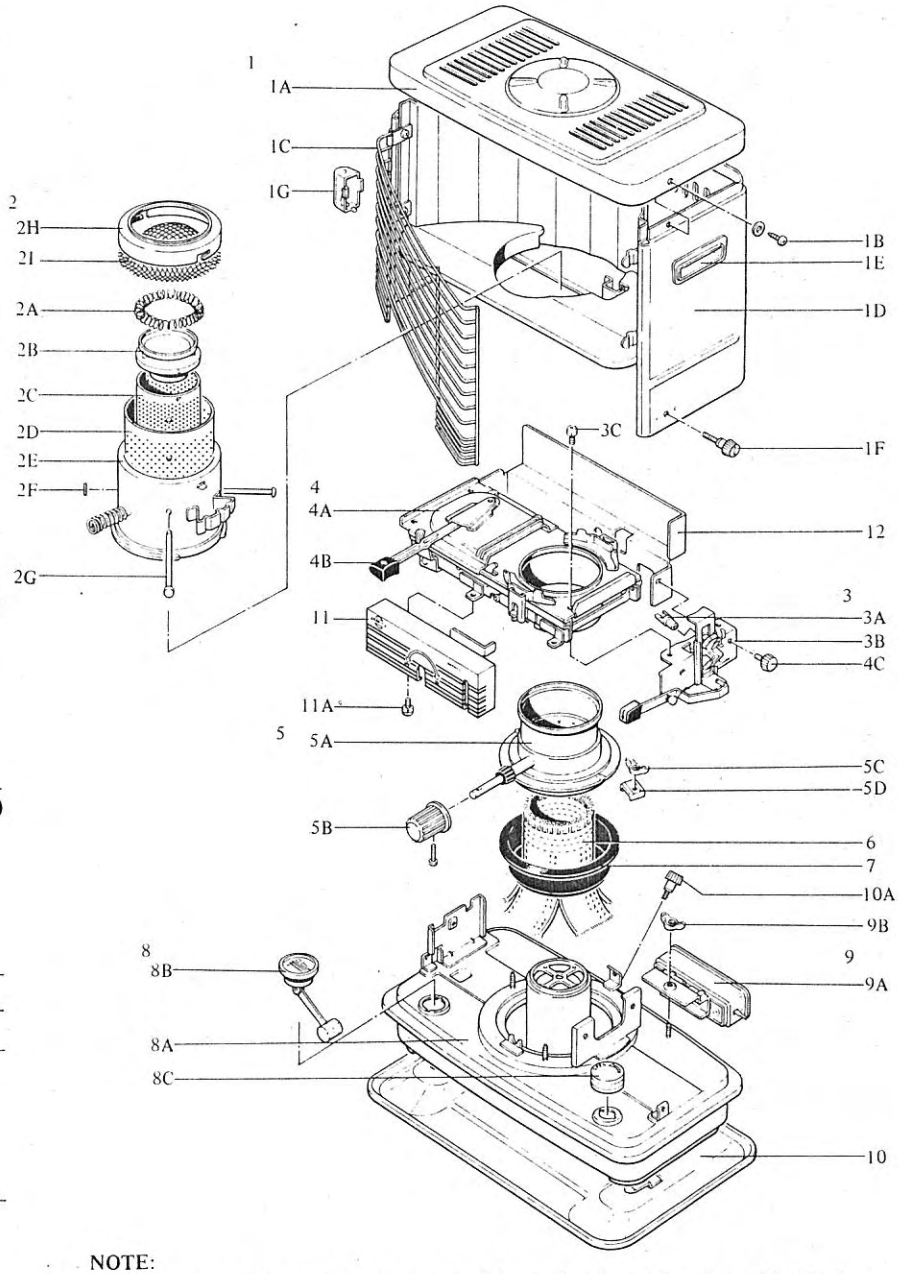

NOTE:
When ordering parts, use the heater model number in conjunction with the key number for the item. For example, the igniter coil is designated RADIANT 22-3A.

KERO-SUN, INC.

Limited Warranty

KERO-SUN, Inc. warrants each heater sold by it to be free from defects in material and workmanship, under normal use and service, for one year after the date of original retail purchase, subject to the terms and conditions stated below:

1. WARRANTOR. This Warranty is granted by KERO-SUN, Inc., Main Street, Kent, Connecticut 06757.
2. PARTIES TO WHOM WARRANTY IS EXTENDED. This Warranty shall be extended only to the original retail purchaser.
3. PARTS COVERED. All products and parts manufactured by or for KERO-SUN, Inc., except as provided for herein.
4. PARTS NOT COVERED. The following parts are not covered by this Warranty:
   Normal wear and tear items, such as, but not limited to, wicks, batteries, igniter coils, and siphons.
5. REMEDY. If, within the applicable warranty period, any product or part included in this Warranty proves to be defective in material and/or workmanship, then KERO-SUN, Inc. shall, at its option, repair or replace the defective product or part.
6. PROCEDURE FOR OBTAINING PERFORMANCE UNDER THIS WARRANTY. In order to obtain performance of the obligations under this Warranty, the original retail purchaser must promptly [in no event later than thirty (30) days after discovery of the defect] notify any authorized KERO-SUN, Inc. service center in the United States or Canada of the defect and return the defective part or product to an authorized KERO-SUN service center. All transportation costs to and from the authorized KERO-SUN, Inc. service center will be at the expense of the original retail purchaser.

   If the instrument or any part thereof is returned for any cause not covered by this Warranty, a charge will be made for testing, handling, packing and/or any repairs made.

   KERO-SUN, Inc. accepts no responsibility for any damage that occurs to the product or part during transit to or from the original retail purchaser.

   ANY CLAIM MADE UNDER THIS WARRANTY MUST BE ACCOMPANIED BY PROOF OF ORIGINAL PURCHASE DATE — SALES INVOICE OR CANCELLED CHECK IS SATISFACTORY EVIDENCE.
7. SOLE REMEDY. The remedy and liability for any breach of warranty, express or implied, set forth above is the sole and exclusive remedy and the limit of liability for any such breach.
8. DESIGN CHANGES. KERO-SUN, Inc. reserves the right to make changes in the design or material of the heater without incurring any obligations to incorporate such changes in any product previously manufactured or advertised.
9. EXCLUSIONS AND IMPLIED WARRANTIES. This Warranty does not extend to any defect due to the negligence of others, failure to operate or maintain the heater in accordance with the operating and maintenance instructions furnished with each new heater, unreasonable use, accidents, alterations, ordinary wear and tear, the use of unauthorized or non-standardized parts or accessories or the use of any fuel other than good quality kerosene. ALL IMPLIED WARRANTIES, IF ANY, ARISING UNDER STATE LAW IN CONNECTION WITH THE SALE BY KERO-SUN, Inc. OF ANY NEW INSTRUMENT ARE LIMITED IN DURATION TO THE DURATION OF THIS WRITTEN WARRANTY. THERE ARE NO WARRANTIES, EXPRESS OR IMPLIED, OF MERCHANTABILITY, FITNESS OR OTHERWISE WHICH EXTEND BEYOND THIS WARRANTY. KERO-SUN, Inc. SHALL NOT BE RESPONSIBLE FOR LOSS OF USE OF ANY HEATER, LOSS OF TIME, INCONVENIENCE OR OTHER INCIDENTAL OR CONSEQUENTIAL DAMAGES WITH RESPECT TO BUSINESS OR PROPERTY, WHETHER AS A RESULT OF BREACH OF WARRANTY, NEGLIGENCE OR OTHERWISE.

   NOTE: SOME STATES DO NOT ALLOW (a) LIMITATIONS ON HOW LONG AN IMPLIED WARRANTY LASTS OR (b) THE EXCLUSION OR LIMITATION OF INCIDENTAL OR CONSEQUENTIAL DAMAGES, SO THE ABOVE LIMITATIONS OR EXCLUSIONS MAY NOT APPLY TO YOU.
10. NO ORAL VARIATION OF TERMS. No person has the authority to orally vary the terms, conditions or exclusions of this Warranty or to make any express warranties other than those contained herein.
11. LEGAL RIGHTS. This Warranty gives you specific legal rights and you may also have other rights which vary from state to state.

If you need assistance with any service problem, send a brief letter stating the nature of the problem, name and address of your KERO-SUN dealer, and your own address and telephone number to:

CUSTOMER SERVICE
KERO-SUN, Inc.
Kent, CT 06757

KERO-SUN INC.

PORTABLE HEATERS

Puts the WARM where you want it!

KERO-SUN, INC., KENT, CONN. 06757
TEL. (203) 927-3581

Printed in Japan

©1979, KERO-SUN, Inc.